CAD FILE:

Kinghelm®

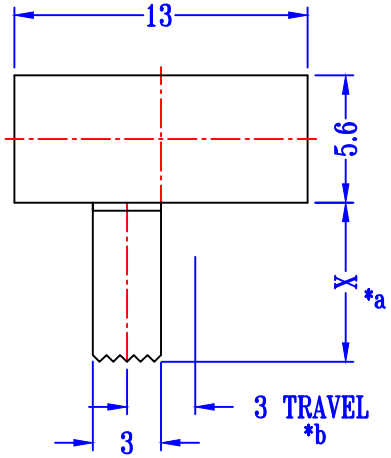

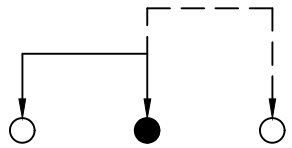

SCHEMATIC (NON-SHORTING)

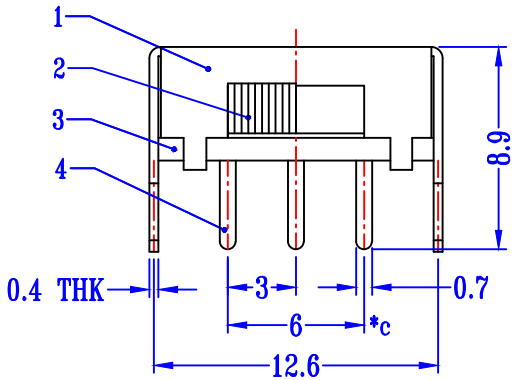

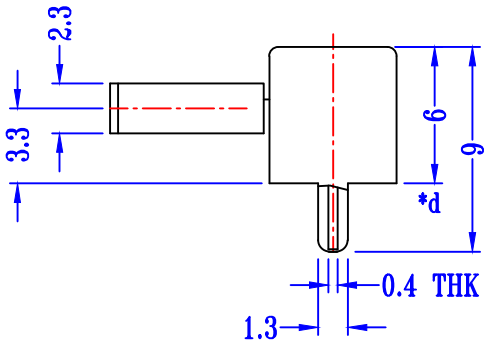

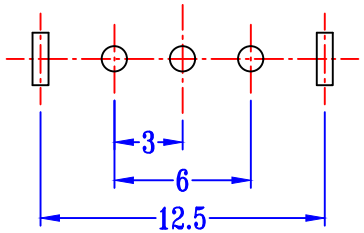

P.C.B LAYOUT
BOTTOM VIEW

注:"*"表示关键尺寸(4个).

NO.	PARTS	MATERIALS	Q'TY	FINISH
8				
7				
6	SPRING	STEEL WIRE	1	NATURAL
5	CONTACT	BRASS STRIP	1	Ag PLATED
4	TERMINAL	BRASS STRIP	3	Ag PLATED
3	BASE	PHENOLIC RESIN	1	NATURAL
2	KNOB	POM	1	BLACK
1	FRAME	STEEL STRIP	1	Ni PLATED

TOLERANCE UNLESS SPECIFIED
WITHIN 1.5mm : ±0.1mm
OVER 1.5mm : ±0.2mm

ISSUE	DATE	DESCRIPTIONS OF REVISION	APPD.
A	2019-12-23	初 版	刘小明

TITLE : HORIZONTAL SLIDE SWITCH
UNIT : mm
DRWG NO.: SK12F14
MODEL: SK12F14
SCALE: 3:1

DWN.	刘 彩	2019-12-23
CHK'D	张 军	2019-12-23
APPD.	刘小明	2019-12-23

深圳市金航标电子有限公司 www.kinghelm.com.cn
KH-SK12F14-G10 0755-28190160